Lecture – 24

Example:

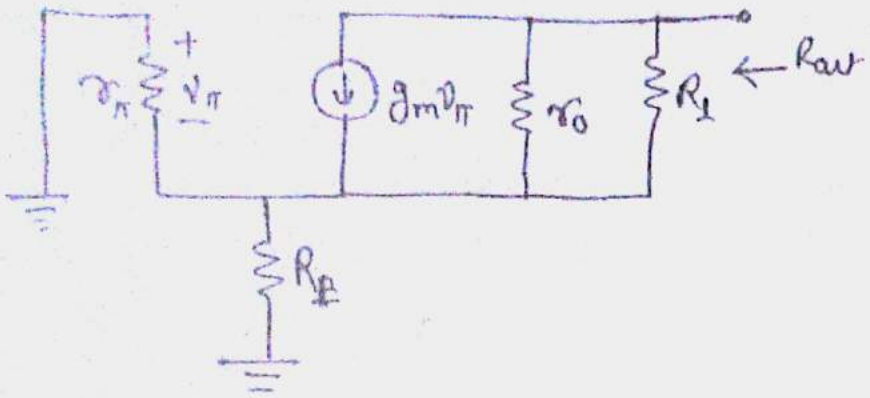

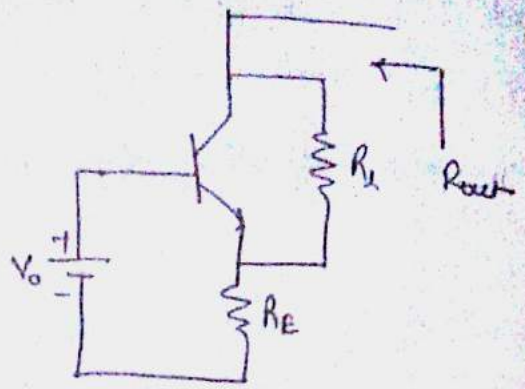

Since the only change in this ckt is that R_1 is in parallel with R_o. So by previous eqn.

$$R_{out} = [1+g_m r_o \| R_E](r_E \| r_\pi) + (r_o \| R_1)$$

Example:-

In this when we draw small signal model then current source I_1 becomes open that means R_E resistance is ∞. So we just replace R_E by ∞ in previous equation,

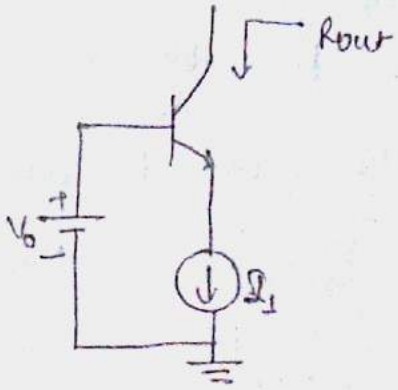

$$R_{out} = (1+g_m r_o) r_\pi + r_o$$

$$= r_\pi + \underbrace{g_m r_\pi}_{\beta} r_o + r_o$$

$$= r_\pi + (\beta+1) r_o$$

$$\approx r_o(\beta+1) \approx \beta r_o$$

Introduction to biasing:-

→ If we have complex circuit consisting of several different stages, we will not connect a battery to each stage.

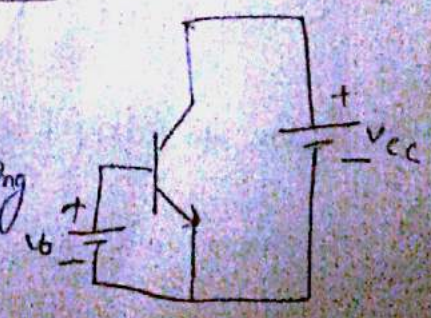

Scanned by CamScanner

* We take only one battery for entire ckt and feed it to each stage. Since we cannot generate directly 0.8 V for base emitter from V_{CC} we take a resistive divider for feeding it.

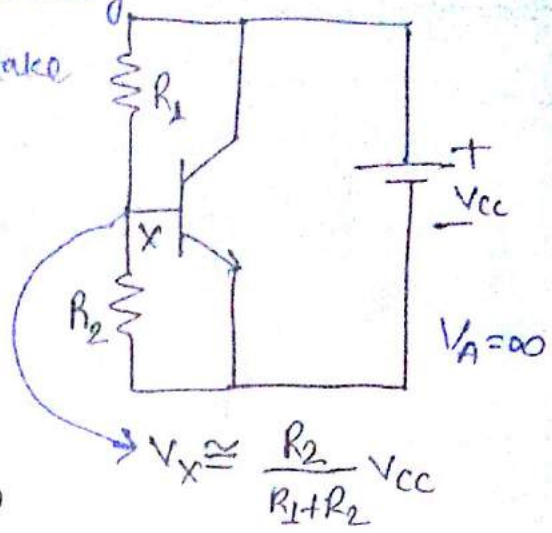

<u>Question:</u> What happens to the input impedance?

Since the input impedance of the previous ckt is r_π but for this ckt we will have,

$$\boxed{R_{in} = R_1 \| R_2 \| r_\pi}$$

So the input resistance reduces, for not affecting much we choose R_1 and R_2 preferably much greater than r_π.

<u>Question:-</u> How about the base current?

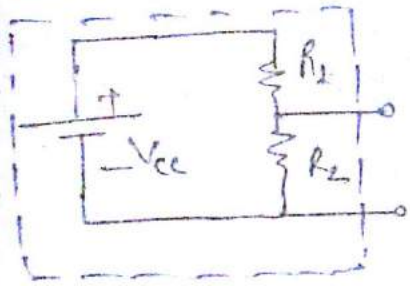

Now we will find Thevenin's equivalent circuit

$$V_{Th} = \frac{V_{CC} \cdot R_2}{R_1+R_2}$$

$$R_{Th} = \frac{R_1 R_2}{R_1+R_2}$$

Now we simply the ckt,

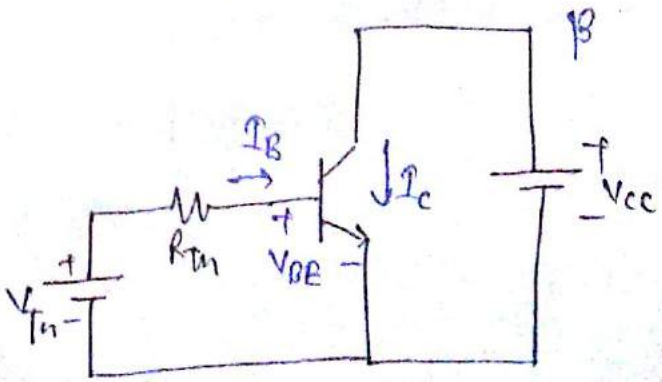

$$V_{Th} = I_B R_{Th} + V_{BE}$$

$$= I_B R_{Th} + V_T \ln\left(\frac{I_C}{I_S}\right)$$

$$= I_B R_{Th} + V_T \ln\left(\frac{\beta I_B}{I_S}\right)$$

If we have all these value we can find I_B iterating.

Scanned by CamScanner

→ There is some sensitivity in this ckt to the β of the bipolar device, if the β of the bipolar device changes from 100 to 50 because of various effects or 100 to 200 then I_B current changes. If I_B changes V_X changes which is not good for operating transistor.

→ For V_X or V_{BE} to be insensitive to β or I_B, we choose current through the R_1 & R_2 is so large, since I_B is very small which is small fraction of total current so V_X becomes insensitive to I_B.

To reduce sensitivity of V_X to I_B (and β):—

choose

$$\frac{V_{CC}}{R_1+R_2} \gg I_B$$

Question:- How do we interface this circuit with the preceding stages?

Sol:

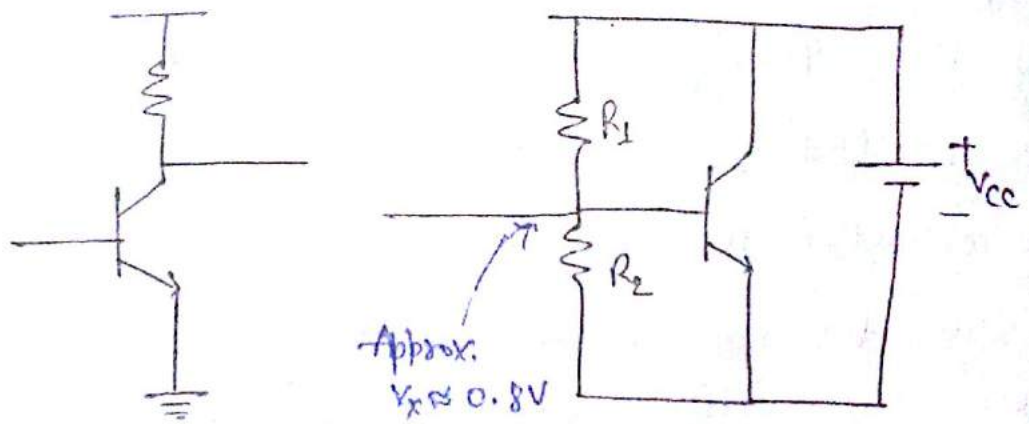

(Q1) Design preceeding stage for V_{out} approximately 0.8 V and connect directly. (DC coupling)

→ In this approach, we have $V_{out} = 0.8V$ of preceding stage and directly connect to base of next stage, we don't need R_1 & R_2 because we have 0.8V from preceeding stage. We just remove R_1 & R_2 then simplify the ckt.

Scanned by CamScanner

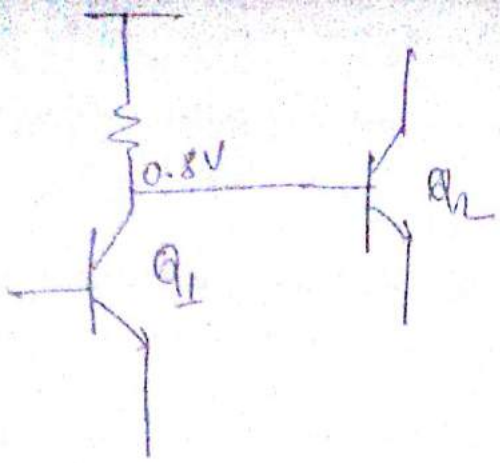

However, there are some cases, preceding stage would not be happy with 0.8 V at output because of some various problems.

(b) If the voltage 0.8V can not generated by preceding stage then we use ac coupling.

→ We just use a capacitor to connect both stages. If there is no signal so we have only dc quantity then capacitor becomes open circuited. so both stage have no interaction for dc quantities.

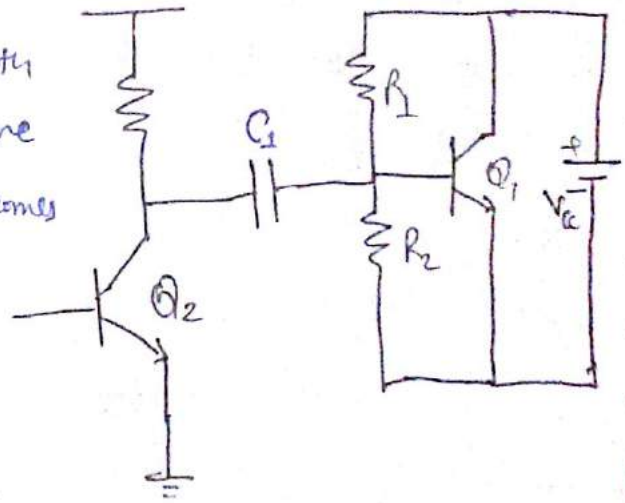

→ When the signal comes in, the signal creates some voltage swing here, it has no zero frequency so signal propagates to next stage.

→ Since for the signal, we can let the signal conduct. For choosing the capacitor value, since

$$\text{impedance of } C_1 = \frac{1}{C_1 \omega}$$

So we need lowest frequency for passing through the capacitor. C_1 should be a reasonable short circuit at the lowest signal frequency. (eg. 1Ω, 2Ω ....)

Scanned by CamScanner

We choose,

$$\boxed{\frac{1}{\omega C_1} \ll R_{in} \left(= r_\pi \| R_1 \| R_2\right)}$$

- Design procedure for simple biasing:-

$$I_C \longrightarrow I_B \longrightarrow \left.\begin{array}{l} \dfrac{V_{CC}}{R_1+R_2} \approx 10 I_B \\ \dfrac{R_2}{R_1+R_2} V_{CC} \simeq 0.8V \end{array}\right\} R_1 \& R_2$$

→ If we have I_C we can find I_B just by dividing it by β and we choose R_1 and R_2.

- Problem of supply sensitivity:-

→ We choose the current through the resistor R_1 & R_2 be much larger than I_B to avoid the ~~sensity~~ sensitivity to β but there is another sensitivity which we have not resolved that is sensitivity due to V_{CC}.

Suppose V_{CC} goes up by +5% → V_{BE} goes up by 5%

If V_{BE} is 800 mV ⇒ $\Delta V_{BE} = 40$ mV

→ $I_C \uparrow$ by $\exp\left(\frac{40\,mV}{26\,mV}\right) = 4.65$ fold

So that's a problem if we designed a ckt for collector current 1mA suddenly collector current goes up by 4.65.

Scanned by CamScanner

• CE stage with degeneration :-

Observation:-

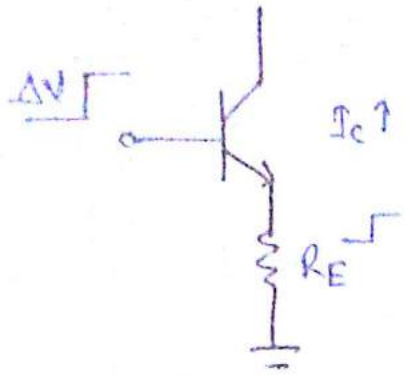

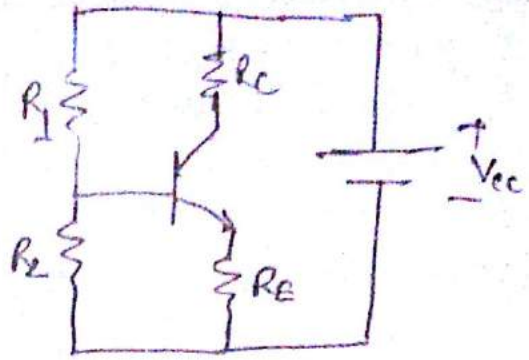

When the Base voltage goes up, I_C increases so current through R_E also increases therefore voltage at emitter also goes up by some amount. Therefore V_{BE} does not changes much. Therefore current I_C does not change much.

Lecture - 25

• Sensitivity to V_x change:-

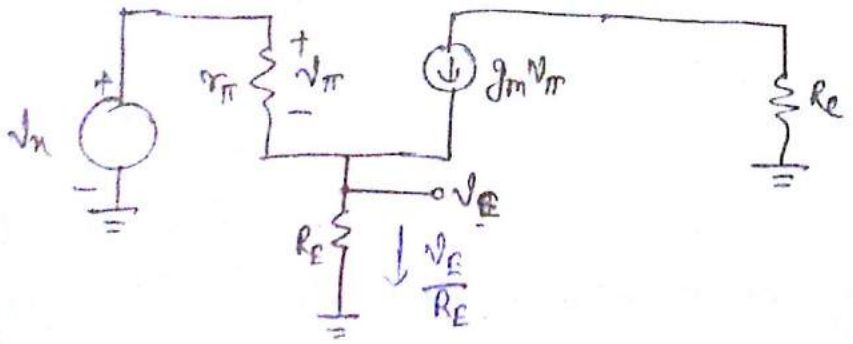

We model change in voltage V_x by v_x and change in V_E by v_E.

$$v_x = v_\pi + v_E$$

$$\Rightarrow v_\pi = v_x - v_E$$

KCL at node emitter,

$$\frac{v_x - v_E}{r_\pi} + g_m (v_x - v_E) = \frac{v_E}{R_E}$$

Scanned by CamScanner

$$\Rightarrow \quad v_x\left(\frac{1}{r_\pi}+g_m\right) = \frac{v_E}{R_E} + \frac{v_E}{r_\pi} + v_E g_m = v_E\left(\frac{1}{R_E}+\frac{1}{r_\pi}+g_m\right)$$

$$\Rightarrow \quad \frac{v_E}{v_x} = \frac{R_E}{\frac{1}{g_m}+R_E} < 1$$

So the emitter voltage change is less than change in base voltage. If $1/g_m$ is much less than R_E then $R_E/(1/g_m+R_E)$ close to 1. Therefore, change in base voltage creates same change in voltage at emitter that means base emitter voltage does not change much.

If $\frac{1}{g_m} \ll R_E$ then $V_E \approx v_x \Rightarrow V_{BE}$ changes by only a small amount.

$\rightarrow R_E I_C \gg V_T$

Therefore, DC voltage drop across R_E must be much greater than 26 mV.

- Summary of Biasing:-

$$\frac{V_{CC}}{R_1+R_2} \approx 10 I_B \quad , \quad R_E I_C \gg V_T$$

$$V_C = V_{CC} - I_C R_C \geq V_X$$

Example:- $V_{CC} = 1.5V$, $P = 1.5mW$, $\beta = 100$

$$I_{supply} = I_{CC} = \frac{P}{V_{CC}} = 1mA \Rightarrow I_C \approx 1mA$$

$$\Rightarrow \quad I_B = 10\mu A \quad \Rightarrow \frac{V_{CC}}{R_1+R_2} \approx 100\mu A$$

Pick $R_E I_C = 100mV \Rightarrow R_E = 100\Omega$

Scanned by CamScanner

$V_x = V_B = 100mV \approx 0.9V \approx \frac{R_2}{R_1+R_2} V_{CC}$

$R_1 \approx 9k\Omega$, $R_2 \approx 1k\Omega$

$V_C = V_{CC} - I_C R_C \geq V_x + 0.9V$

$1.5 - R_C \geq 0.9$

$R_C = 600\Omega$

Quiz (a) Calculate the gain of the amplifier.

(b) How do we increase the gain without changing the bias components?

Sol^n (a)

$$A_v = -\frac{R_C}{\frac{1}{g_m} + R_E} = -4.76$$

This need to be reduced

(b) This amplifier is used to amplify the signal, the signal has some frequency components for example, human voice 20Hz–20kHz. When the signal comes in which is ac signal. We can increase the gain by reducing R_E for ac signal not for DC. We use capacitor whose impedance goes down as the frequency goes up. A capacitor is open circuit for dc so does not effect on bias conditions. For signal (ac), capacitor has low impedance, so if we place capacitor in parallel with R_E then the value of R_E reduces as the impedance of capacitor is low. Therefore the gain becomes higher than previous value.

Suppose C_E is good short ckt. at frequency of interest. Then the impedance between emitter and ground becomes approx.

Scanned by CamScanner

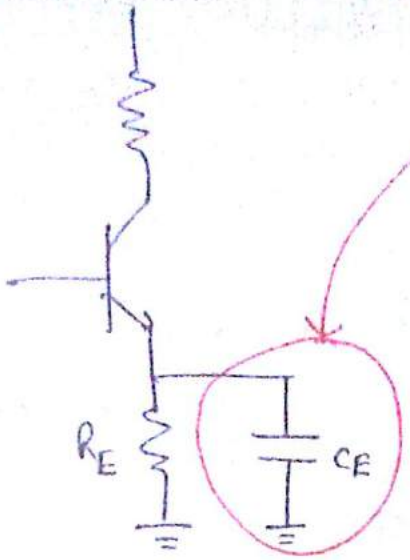

$\frac{1}{C_E \omega}$ should be small for reducing resistance between emitter & ground

zero therefore gain becomes $-g_m R_C$.

If $v_x = 45mV$ (5% change), $v_E = \frac{R_S}{\frac{1}{g_m} + R_S} \times 45mV = 36mV$

Change in emitter (collector) current $= \frac{36mV}{100\Omega} = 0.36mA$

which is good than previous.

• Self biased CE stage :-

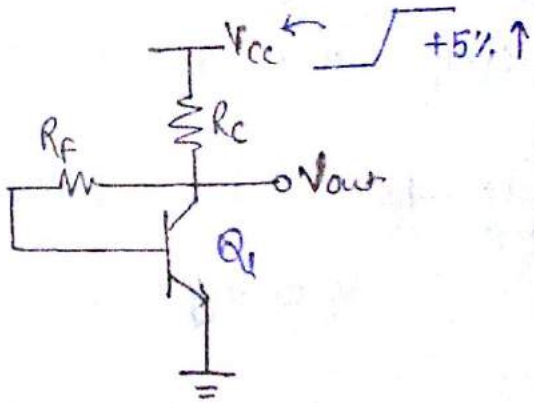

→ changes in V_{CC} are counteracting by Q_1. The R_F creates negative feedback here in the circuit.

→ If supply goes up by 5%, V_C wants to go up and base voltage goes up so I_C current increases therefore V_C reduces therefore in this circuit, it has self/auto correction mechanism. Therefore we say it self bias CE stage.

→ $V_B = V_C - I_B R_F \Rightarrow V_B < V_C$

⇒ Q_1 does not saturate because of this.

Scanned by CamScanner

Calculate the collector bias current $\qquad \beta \gg 1 \Rightarrow I_B \ll I_C$

$$V_C = V_{CC} - R_C I_C$$

$$V_{CC} - I_C R_C - R_F I_B = V_{BE}$$

$$I_B = \frac{I_C}{\beta}$$

If we don't know V_{BE} $\rightarrow$ $V_T \ln \frac{I_C}{I_S}$

We find I_C by just iteration.

$$I_C = \frac{V_{CC} - V_{BE}}{R_C + (R_F/\beta)}$$ ← when V_{BE} is known

(1) To minimize sensitivity to β, we choose $R_C \gg \frac{R_F}{\beta}$, in other words, $R_F \ll \beta R_C$

(2) If V_{CC} goes up by 5%, I_C goes up about 5% but V_{BE} does not change much because it is related by I_C with logarithmic function.

Example:- $P = 4.5\,mW$, $V_{CC} = 1.5V$, $I_C = 1mA$, $\beta = 100$

$$V_C \approx 0.9V \Rightarrow R_C = \frac{1.5 - 0.9}{1mA} = 600\,\Omega$$

$$R_F = \frac{\beta R_C}{10} = 6\,K\Omega$$

$I_B \approx 10\mu A$ because $\beta = 100$

drop on R_F = 60mV

Scanned by CamScanner